Millennium Honda

Dio WANNA HAVE FUN?

**The above TFT image is of Dio 125.*

INTRODUCING

Dio 110 / Dio 125

EXPERIENCE FUN LIKE NEVER BEFORE.

Honda Dio 110 and Dio 125 are the perfect rides to make the most of your day and have fun all the way. They're powerful, and power-packed with world-class features. They're comfortable and commanding. They're style personified. But most of all, they promise a smooth, efficient, and fun experience, every single time.

Dio WANNA HAVE FUN WITH NEW TECHNOLOGY?

TFT METER 10.67 cm

Dio 110 | Dio 125

Advanced and interactive, the TFT meter provides real-time and average fuel efficiency, and range (distance to empty), keeping you always informed.

- REAL-TIME MILEAGE
- RANGE (DISTANCE TO EMPTY)
- AVERAGE MILEAGE

*Image reference is for Dio 125.

Dio 125

Honda RoadSync

Stay connected effortlessly with the Honda RoadSync app.
Seamlessly link your smartphone to your Dio 125 via Bluetooth.
And enjoy a smooth, hassle-free ride while accessing essential features right at your fingertips.

Manage messages via voice commands

Use turn-by-turn navigation to reach anywhere

Get real-time weather updates for any location

Manage and make calls directly from your Dio 125

Enjoy easy music control

Dio 125

Smart Key

With H-Smart Technology

Unlock a smarter ride with our H-Smart technology and experience the ultimate convenience and security with the Honda Smart Key.

SmartFIND

Searching for your ride in a crowded parking or low-light conditions can be frustrating and the answer back feature solves it.

SmartSAFE

Your Dio 125 stays secure, even when you're not around.

SmartSTART

Start your Dio 125 without even taking the key out of your pocket.

SmartUNLOCK

No need to fumble for your key- Honda Smart Key makes unlocking effortless.

**Smart Key is available in Dio 125 H-Smart variant only.*

Dio 110

IDLING STOP SYSTEM

Dio 110's Idling Stop System automatically shuts down the engine during brief stops, reducing unnecessary fuel consumption, and easing rider fatigue.

Dio 125

ADVANCED IDLING STOP SYSTEM

The Advanced Idling Stop System on Dio 125 takes fuel efficiency and convenience to the next level as it automatically cuts-off the engine below a certain speed and seamlessly restarts the engine when the rider pulls-up the throttle again.

Dio 110

Dio 125

SIDE STAND ENGINE CUT-OFF*

It automatically shuts off the engine for added safety when the side stand is engaged.

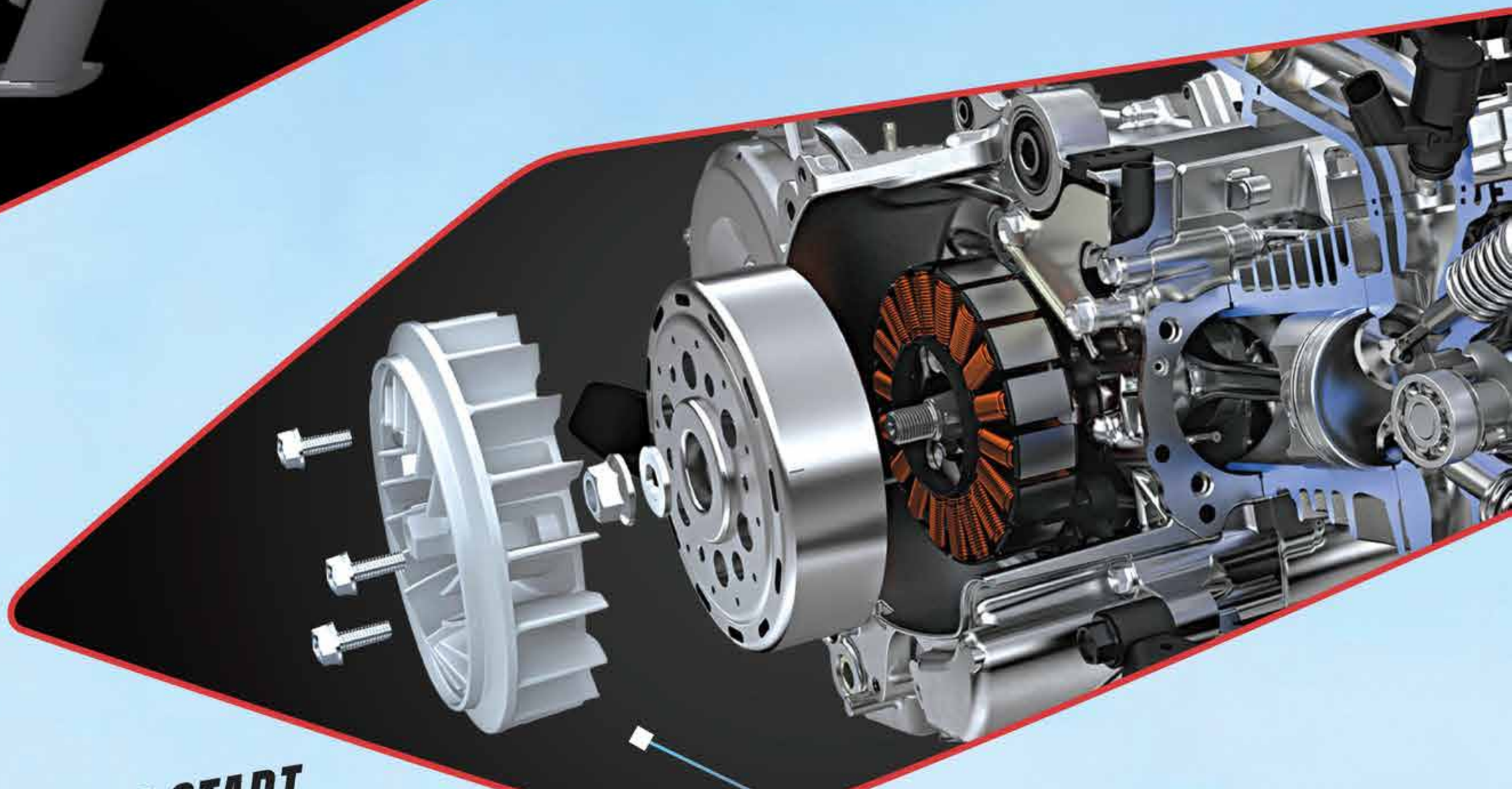

SILENT START WITH ACG

The ACG Starter provides a smooth, silent start every time, and reduces engine maintenance.

PGM-FI FUEL INJECTION

The PGM-FI system optimizes fuel and air for efficient combustion, ensuring steady power and better mileage.

*Side stand is a part of genuine standard accessories.

DO WANNA HAVE FUN WITH COMFORT?

Dio 110

Dio 125

USB TYPE-C CHARGING

With the built-in USB Type-C charger, never ever worry about your phone's battery running out.

DOUBLE-LID EXTERNAL FUEL FILL

Now no need to get up to get your Dio refilled with a double-lid external fuel fill.

Dio 110

Dio 125

PASSING SWITCH

Pass like a boss with an easy-to-use passing switch for high beam, low beam, and passing with a flick.

RETRACTABLE PILLION FOOT STEP

Convenient and easy to use, so that the comfort of those sitting behind is always at the forefront.

FRONT POCKET

A pocket that's amazingly spacious. So, whether it's your sipper or sunglasses, keep all your essentials close.

Dio 125

MULTI-FUNCTION UNIT*

Safety meets style, style meets convenience. An iconic sleek, blue back-lit knob that elevates your ride and ride quality.

TELESCOPIC SUSPENSION

Say goodbye to bumpy rides! Our telescopic suspension features dual hydraulic shock absorbers with internal coil springs, designed for minimum vibrations, maximum comfort.

12-INCH FRONT WHEEL

Our 12-inch wheels are designed to tackle tough terrains with ease, giving you effortless clearances and enhanced confidence.

*Available only in H-Smart variant.

Dio WANNA HAVE FUN WITH

STYLE?

Dio 110

Dio 125

SPLIT GRABRAIL

A bold, sleek grabrail that grabs attention from the first glance onwards.

SPORTY MUFFLER

A stylishly cool muffler protector on Dio 110 to up the style.

A thunderous sound for a thunderous entry. Dio 125's dual-tip muffler announces your arrival before you even arrive.

ALLOY WHEELS

These alloy wheels combine stylishness with unmatched comfort.

Dio 110

Dio 125

SPORTY DISC BRAKE

Only for Dio 125

High-performance disc brakes fitted in sleek alloy wheels, perfect for those who like to stay stylishly in command.

FIERCE LED HEADLAMP

For trendsetters who own the night, the sleek LED lights provide a bright, clear view of the road ahead.

POSITION LAMP

The distinctive LED lamp enhances the bold look while adding a touch of flair to your style.

DIO WANNA HAVE FUN WITH COLOURS?

DIO 110

IMPERIAL RED METALLIC

MAT MARVEL BLUE

MAT AXIS GRAY METALLIC

PEARL IGNEOUS BLACK

PEARL IGNEOUS BLACK + PEARL DEEP GROUND GRAY

DIO 125

MAT MARVEL BLUE METALLIC

PEARL DEEP GROUND GRAY (EMBLEM)

PEARL SPORTS YELLOW

PEARL DEEP GROUND GRAY (STRIPE)

IMERIAL RED

PEARL IGNEOUS BLACK

AVAILABLE IN 2 DIFFERENT VARIANTS

Dio 110

Features	STD	DLX
TFT Meter	✗	✓
Eco Indicator	✗	✓
Real-Time Fuel Efficiency	✗	✓
Average Fuel Efficiency	✗	✓
Range (Distance To Empty)	✗	✓
Alloy Wheels	✗	✓
Periodic Maintenance Indicator	✗	✓
Automatically Adjustable Meter Light & Dark Theme Modes	✗	✓
Universal USB-C Type Charging	OP	✓
Idling Stop System With Turn Off Switch	✓	✓
Double-Lid External Fuel Fill	✓	✓
Glove Box	✓	✓
ACG Silent Start	✓	✓
CBS With Equalizer	✓	✓

Dio 125

Features	DLX	H-SMART
Multi-Function SMART Switch Unit	✗	✓
Smart Key	✗	✓
Smart Find	✗	✓
Smart Unlock	✗	✓
Smart Safe	✗	✓
Smart Start	✗	✓
Bluetooth Connectivity	✗	✓
Honda RoadSync App	✗	✓
Turn By Turn Navigation With Voice Assist	✗	✓
Calling	✗	✓
Message - Answer Back	✗	✓
Weather Forecast	✗	✓
Music Control Through TFT	✗	✓
TFT Meter	✓	✓
Eco Indicator	✓	✓
Real-Time Fuel Efficiency	✓	✓
Average Fuel Efficiency	✓	✓
Range (Distance To Empty)	✓	✓
Alloy Wheels	✓	✓
Universal USB-C Type Charging	✓	✓
Adv. Idling Stop System With Turn Off Switch	✓	✓
Double-Lid External Fuel Fill	✓	✓
Glove Box	✓	✓
ACG Silent Start	✓	✓
CBS With Equalizer	✓	✓
Disc Brakes	✓	✓
Periodic Maintenance Indicator	✓	✓
Automatically Adjustable Meter Light & Dark Theme Modes	✓	✓

TECHNICAL SPECIFICATION+

Body Dimensions	110 cc	125 cc
Length	1808 mm	1830 mm
Width	677 mm	707 mm
Height	1151 mm	1172 mm
Wheel Base	1260 mm	1260 mm
Ground Clearance	160 mm	171 mm
Seat Length	650 mm	708 mm
Kerb Weight	Std. & Dlx: 106 kg	104 kg (Smart), 105 kg (Dlx)
Fuel Tank Capacity	5.3 L	5.3 L

Engine		
Type	4 Stroke, SI Engine	4 Stroke, SI Engine
Displacement	109.51 cc	123.92 cc
Max Net Power	5.85 kW @ 8000 rpm	6.11 kW @ 6500 rpm
Max Net Torque	9.03 N-m @ 5500 rpm	10.5 N-m @ 5000 rpm
Bore	47.0 mm	50.0 mm
Stroke	63.121 mm	63.113 mm
Fuel System	PGM - FI	PGM - FI
Compression Ratio	10.0:1	10.0:1
Air Filter Type	Viscous Paper Filter	Viscous Paper Filter
Starting Method	Kick / Self	Self

Transmission		
Clutch Type	Automatic Centrifugal Clutch Dry Type	Automatic Centrifugal Clutch Dry Type

Tyres & Brakes		
Tyre Size (Front)	90/90-12 54J	90/90-12 54J
Tyre Size (Rear)	90/100-10 53J	90/100-10 53J
Tyre Type (Front)	Tubeless	Tubeless
Tyre Type (Rear)	Tubeless	Tubeless
Brake Type & Size (Front)	Drum - 130 mm	Disc - 190 mm
Brake Type & Size (Rear)	Drum - 130 mm	Drum - 130 mm

Frames & Suspensions		
Frame Type	Underbone	Underbone
Front	Telescopic	Telescopic
Rear	Unit Swing	3-Step Adjustable Spring Loaded Hydraulic

Electricals		
System Voltage	12V	12V
Battery	5.0 Ah	5.0 Ah
Head Lamp	LED	LED

+The technical specifications and design of the vehicle may vary according to the requirements and conditions without any notice • Range (distance to empty), real time and average mileage readings may vary as per the variant and riding conditions • Dio 110 and Dio 125 meets Bharat stage VI OBD-2B norms • Product shown in the picture may vary from the actual product available in the market • Accessories shown in the picture are not part of the standard equipment • All features and colours may not be part of all variants • +Conditions apply.

Honda Motorcycle and Scooter India Pvt. Ltd.
Registered Office: Plot No. 1, Sector-03, IMT Manesar, Distt. Gurugram- 122050 (Haryana)
Tel: +91(0)124-2290011, +91(0)6712800, **Fax:** +91(0)124-6712999
Visit us at: www.honda2wheelersindia.com **Customer Care:** customercare@honda.hmsi.in
Follow us at : honda2wheelers.in honda2wheelerin honda2wheelersin honda2wheelerin

Dealer Stamp

Millennium Honda
Karmaveer Bhaurao Patil Chowk, Sangli- Miraj Road
Sangli
Tel: 0233-2600909
Mob: 18002091117